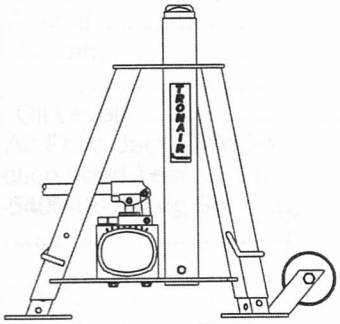

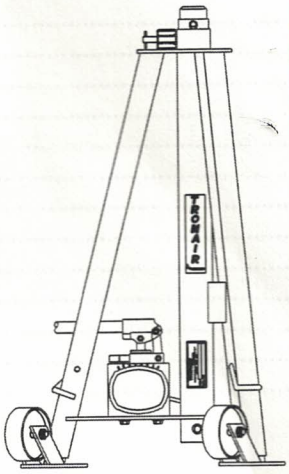

Models
02-0222-0111 02-0234-0111
03-5400-0000
Two Ton Hydraulic Jack

TRONAIR

So Many Products
So Much Value

Operation & Service Manual

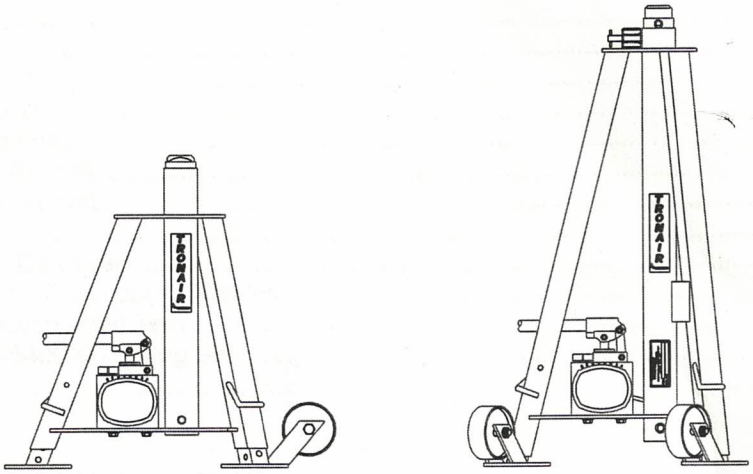

Models
02-0222-0111 02-0234-0111
03-5400-0000
Two Ton Hydraulic Jack

05/1997 – Rev. 03

Includes Illustrated Parts Lists

Tronair, Inc.
1740 Eber Road
Holland, Ohio 43528-9794
USA
Telephone: (419) 866-6301 • 800-426-6301
Fax: (419) 867-0634
Web Site: www.tronair.com E-mail: sales@tronair.com

TABLE OF CONTENTS

PAGE

1.0 Description 1
2.0 Usage 1
3.0 Specifications 1
4.0 Preparation For Use 1
5.0 Operating Instructions 1
5.1 To Raise Aircraft 2
5.2 To Lower Aircraft 2
6.0 Maintenance 2
6.1 Reservoir Oil Level 2
6.2 Bleeding Air From Jack Cylinder 2
6.3 Jack Function Load Test 2
7.0 Installation Of 03-5400-0000 Leg Set 3
Parts List 4

APPENDIX I MSDS Hydraulic Fluid

Models 02-0222-0111/02-0234-0111/03-5400-0000
Two Ton Hydraulic Jack

This product can not be modified without the written approval of Tronair, Inc. Any modifications done without written approval voids all warranties and releases Tronair, Inc., it suppliers, distributors, employees, or financial institutions from any liability from consequences that may occur.

1.0 DESCRIPTION

The Tronair 2-Ton Hydraulic Jacks incorporate the following quality features:

- Sturdy steel construction
- Self contained
- Telescoping legs for easily adjustable closed heights
- 4 inch heavy duty wheels
- Safety locking mechanisms on ram and legs
- Uses standard MIL-H-5606 hydraulic fluid
- Optional jack pad kits available with the 02-0222-0111 jack for the Cessna Caravan and the Beechcraft Duke. (See Page 4).

2.0 USAGE

The purpose of the Tronair 2-Ton Jacks are used to lift light aircraft for maintenance.

3.0 SPECIFICATIONS

Tronair Model	Vertical Capacity (lbs)	Closed Height (Adjustable)	Hydraulic Extension (inches)	Maximum Height (inches)	Weight (lbs.)
02-0222-0111	4500	22 to 34	12	46	70
02-0234-0111	4500	34 to 56	23	79	94
02-0234-0111 with leg set 03-5400-0000	4500	50 to 72	23	95	100

4.0 PREPARATION FOR USE

1. The Tronair Two Ton Hydraulic Jack is shipped fully assembled, ready to use. Remove all packaging material and discard.
2. Check the reservoir fluid level; allow no more than 1/8 inch down. Replenish with MIL-H-5606 fluid as required.

5.0 OPERATING INSTRUCTIONS

The user should be familiar with the following statements prior to using the jack(s).

CAUTION!

- **NEVER extend legs unequally; jack ram must remain vertical.**
- **NEVER put hands between aircraft and jack pad, as after aircraft has been lowered, struts may have hung up.**
- **NEVER align jack under aircraft by pounding on jack legs. Dented legs may lead to jack collapse.**
- **ALWAYS raise and lower jacks simultaneously, so that the aircraft remains level.**
- **ALWAYS use a tail or nose stand, as applicable, for additional stability.**
- **ALWAYS use jack ram locking pin when aircraft is on jacks.**

5.0 Operating Instructions continued on following page.

5.0 OPERATING INSTRUCTIONS

5.1 TO RAISE AIRCRAFT

1. Place the jack on a hard level surface.
2. With the hydraulics fully collapsed, extend the mechanical leg extensions so that the jack is as close to the aircraft jack pad as possible.

CAUTION!

- **NEVER go beyond the last hole in the leg extension tube.**
- **ALWAYS extend all three (3) mechanical leg extensions equally.**

3. Close pump release valve, retract the jack ram locking pin, and operate pump.

CAUTION!

Be sure to retract the jack ram locking pin prior to operating pump.

4. After aircraft is raised, insert the locking pin to secure jack ram.

5.2 TO LOWER AIRCRAFT

1. Retract the jack ram locking pin.

NOTE: ***By raising ram slightly, pin may be retracted easier.***

2. Open pump release valve slightly to slowly lower aircraft ensuring that the aircraft remains level.

6.0 MAINTENANCE

Generally, no maintenance is required.

6.1 RESERVOIR OIL LEVEL

Check the reservoir fluid level; allow no more than 1/8" down. Replenish with MIL-H-5606 fluid as required.

6.2 BLEEDING AIR FROM JACK CYLINDER

1. If your jack cylinder has air in it, it will feel "spongy" or operate in a "jerky" fashion. When this happens, you will need to bleed the air from the cylinder.
2. Close pump release valve and hydraulically raise the jack to approximately 1/2 of fully raised position.
3. Close vent screw.
4. Invert the entire jack assembly.
5. While inverted, open the pump release valve to fully collapse the jack.
6. Return jack to normal upright position.
7. Open the pump vent to allow air to escape.
8. Repeat steps 6.2.2 through 6.2.7 approximately three (3) times, or until all air has been removed.

6.3 JACK FUNCTION LOAD TEST

1. Take all necessary precautions to prevent injury.
2. Always jack against a load and never against the jack itself.
3. Do not exceed a test load equal to the jack rated capacity plus 10%.

7.0 INSTALLATION OF 03-5400-0000 LEG SET

1. This leg set is to be used on the 02-0234-0111, Two Ton Hydraulic Jack only. *(Reference Figure 1).*
2. The leg set consists of three (3) legs that will replace the existing legs on the jack. Pay special attention to the location of the legs, especially the two with the wheels.
3. Lay the jack on its side.
4. One by one, remove the locking pin on a leg, and remove the existing leg.
5. Insert the corresponding extended leg into the jack and replace the locking pin.
6. Be sure that the three mechanical legs are all extended equally.
7. See Section 5.0 to operate the jack; be sure to adjust the attached safety chain before operating the now taller 02-0234-0111 jack.

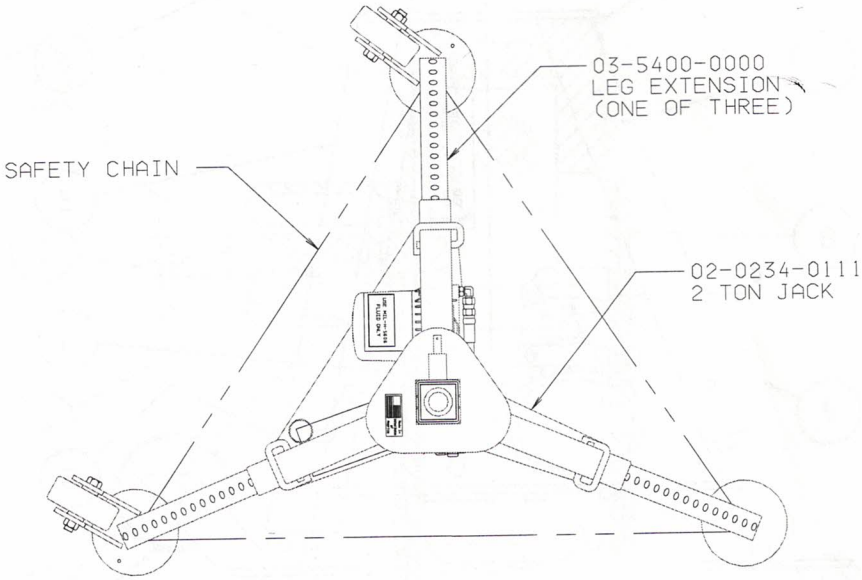

FIGURE 1 - 02-0234-0111 Jack with 03-0234-000 Leg Set

When installing the 03-5400-0000 Leg Set onto the 02-0234-0111 Jack, the three leg extensions must be oriented exactly as shown. Note the location of the pump and spider. After installing the leg set, be sure to adjust the attached safety chain before operating jack.

Parts List

Model: 02-0222-0111

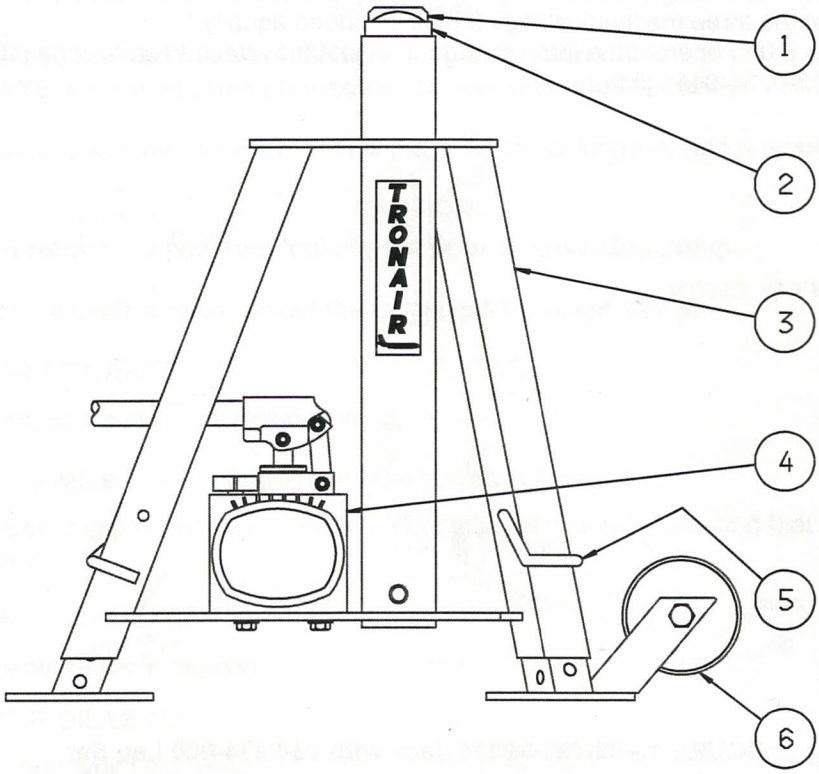

ITEM	PART NUMBER	DESCRIPTION	QTY
1	HJ-213	Pad, Jack	1
2	HJ-205	Tube, Inner Center	1
3	Z-3122-02-01	Weldment, Jack	1
4	HC-1728 (see Page 8)	Pump, Hand	1
5	G-1311-01	Pin, Lock	1
6	**K-1165**	**Kit, Wheel (Set)**; *consists of:*	
	U-1002	Wheel	2
	G-1203-1095	Jamnut, ½-20 Elastic	2
	G-1100-109526	Bolt, ½-20 Hex Head Grade 5	2

OPTIONAL JACK PAD KITS

PART NUMBER	DESCRIPTION	QTY
K-2019	Special Jack Pad for Cessna Caravan	
K-2020	Special Jack Pad for Beechcraft Duke	

Parts List

Model: 02-0222-0111

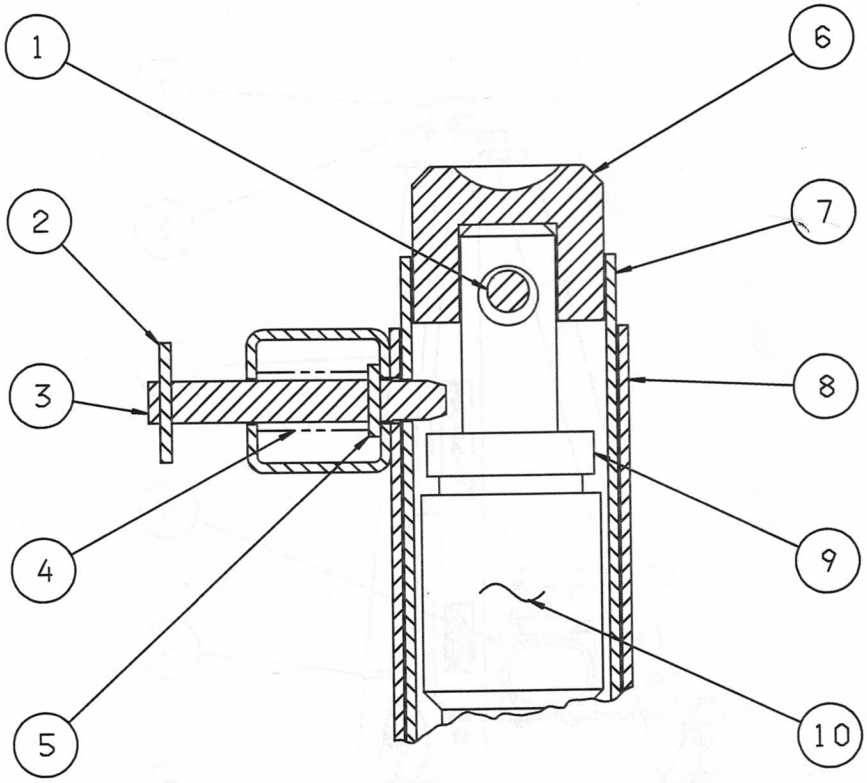

ITEM	PART NUMBER	DESCRIPTION	QTY
1	G-1300-44220	Pin, Roll	1
6	HJ-213	Pad, Jack	1
7	HJ-205	Tube, Inner Center	1
8	Z-3122-02-01	Weldment, Jack	1
9	HC-1683-01	Cylinder	1
10	K-2513	Kit, Cylinder Seal	1
	K-1938	**Kit, Replacement Locking Pin**; *consists of:*	
2	G-1300-13120	Pin, Roll	1
3	HJ-214	Pin, Locking	1
4	B-211	Spring	1
5	G-1300-13060	Pin, Roll	1

Parts List

Model: 02-0234-0111

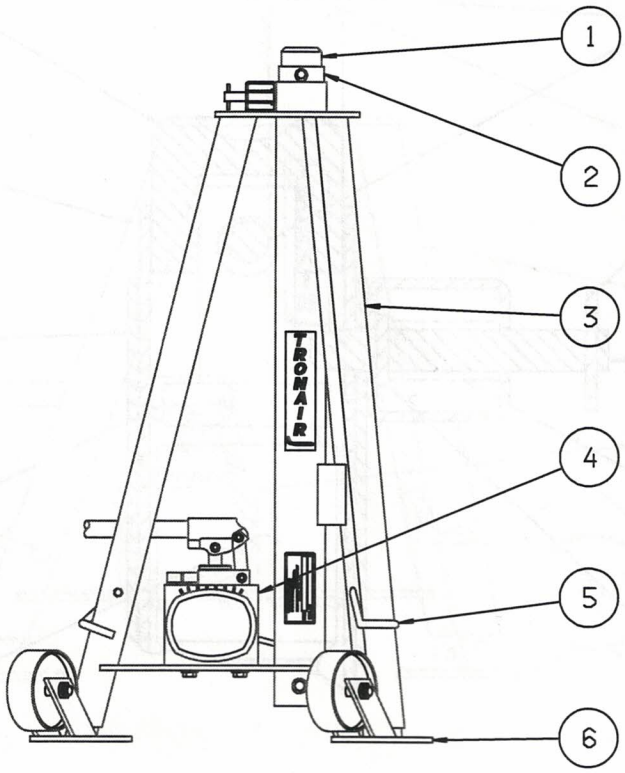

ITEM	PART NUMBER	DESCRIPTION	QTY
1	HJ-213	Pad, Jack	1
2	HJ-207	Tube, Inner Center	1
3	Z-3228-01	Weldment, Jack	1
4	HC-1728 (see Page 8)	Pump, Hand	1
5	G-1311-01	Pin, Lock	1
6	**K-1165**	**Kit, Wheel (Set)**; *consists of:*	
	U-1002	Wheel.. 2	
	G-1203-1095	Jamnut, ½-20 Elastic	2
	G-1100-109526	Bolt, ½-20 Hex Head Grade 5	2

Parts List

Model: 02-0234-0111

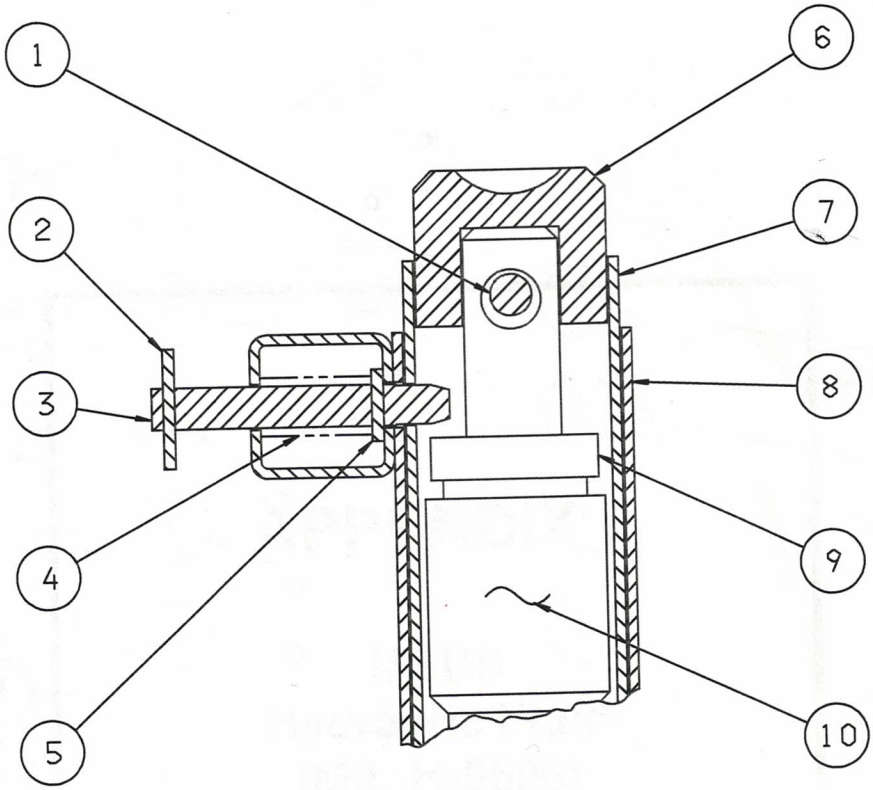

ITEM	PART NUMBER	DESCRIPTION	QTY
1	G-1300-44220	Pin, Roll	1
6	HJ-213	Pad, Jack	1
7	HJ-207	Tube, Inner Center	1
8	Z-3228-01	Weldment, Jack	1
9	HC-1683-02	Cylinder	1
10	K-2513	Kit, Cylinder Seal	1
	K-1938	**Kit, Replacement Locking Pin**; *consists of:*	
2	G-1300-13120	Pin, Roll	1
3	HJ-214	Pin, Locking	1
4	B-211	Spring.. 1	
5	G-1300-13060	Pin, Roll	1

Parts List

HC-1728 Hand Pump

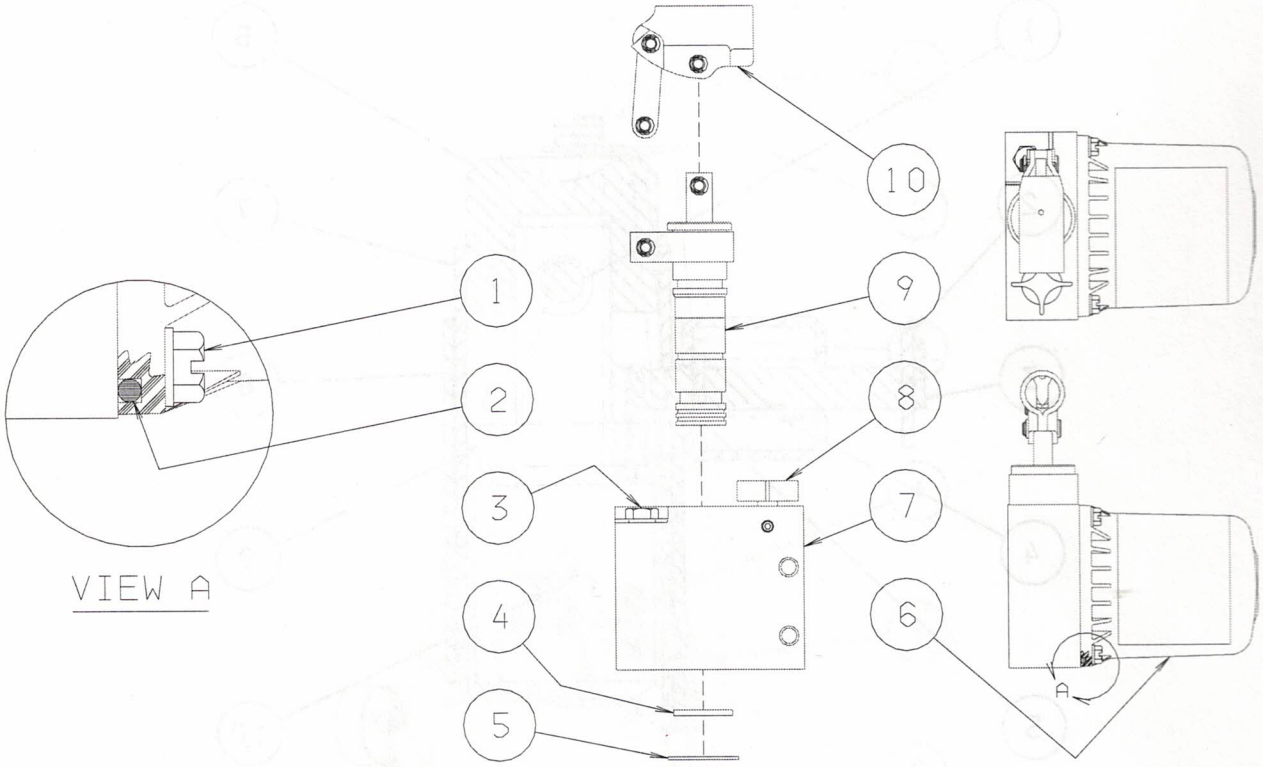

ITEM	PART NUMBER	DESCRIPTION	QTY
1	K-2581-01	Assembly, Cylinder-Insert *(Includes Items: 4, 5 and 9)*	1
3	K-2581-03	Plug, Fill	1
Ref.	K-2581-04	Reservoir *(Includes Items: 1, 2 and 6)*	1
7	*Not Serviced*	Assembly, Pump Body	1
8	K-2581-05	Released Valve Assembly	1
10	K-2581-02	Assembly, Beam-Link	1

TRONAIR

APPENDIX I

MSDS
Hydraulic Fluid
(MIL-H-5606)

ExxonMobil

490110-00 MOBIL AERO HFA
MATERIAL SAFETY DATA BULLETIN

1. PRODUCT AND COMPANY IDENTIFICATION

PRODUCT NAME: MOBIL AERO HFA
SUPPLIER: EXXONMOBIL OIL CORPORATION
3225 GALLOWS RD.
FAIRFAX, VA 22037

24 - Hour Health and Safety Emergency (call collect): 609-737-4411

24 - Hour Transportation Emergency:
CHEMTREC: 800-424-9300 202-483-7616
LUBES AND FUELS: 281-834-3296

Product and Technical Information:
Lubricants and Specialties: 800-662-4525 800-443-9966
Fuels Products: 800-947-9147
MSDS Fax on Demand: 613-228-1467
MSDS Internet Website: http://emmsds.ihssolutions.com/

2. COMPOSITION/INFORMATION ON INGREDIENTS

CHEMICAL NAMES AND SYNONYMS: PET. HYDROCARBONS AND ADDITIVES

GLOBALLY REPORTABLE MSDS INGREDIENTS:

None.

OTHER INGREDIENTS:

Substance Name	Approx. Wt%
HYDROTREATED LIGHT NAPHTHENIC DISTILLATE (PETROLEUM) (64742-53-6)	85-95

See Section 8 for exposure limits (if applicable).

3. HAZARDS IDENTIFICATION

This product is considered hazardous according to regulatory guidelines (See Section 15).

EMERGENCY OVERVIEW: Red Liquid. DOT ERG No. : NA
POTENTIAL HEALTH EFFECTS: Low viscosity material-if swallowed may

enter the lungs and cause lung damage. Prolonged repeated skin contact with low viscosity materials may defat the skin resulting in possible irritation and dermatitis.

For further health effects/toxicological data, see Section 11.

---

4. FIRST AID MEASURES

EYE CONTACT: Flush thoroughly with water. If irritation occurs, call a physician.

SKIN CONTACT: Wash contact areas with soap and water. Remove contaminated clothing. Launder contaminated clothing before reuse. Discard shoes if material has penetrated to inside surfaces. High pressure accidental injection through the skin requires immediate medical attention for possible incision, irrigation and/or debridement.

INHALATION: Remove from further exposure. If respiratory irritation, dizziness, nausea, or unconsciousness occurs, seek immediate medical assistance and call a physician. If breathing has stopped, use mouth to mouth resuscitation.

INGESTION: Get medical assistance and call a physician immediately. Do not induce vomiting or give anything by mouth to an unconscious person.

NOTE TO PHYSICIANS: Material if ingested may be aspirated into the lungs and can cause chemical pneumonitis. Treat appropriately.

---

5. FIRE-FIGHTING MEASURES

EXTINGUISHING MEDIA: Carbon dioxide, foam, dry chemical and water fog.

SPECIAL FIRE FIGHTING PROCEDURES: Water or foam may cause frothing. Use water to keep fire exposed containers cool. Water spray may be used to flush spills away from exposure. Prevent runoff from fire control or dilution from entering streams, sewers, or drinking water supply.

SPECIAL PROTECTIVE EQUIPMENT: For fires in enclosed areas, fire fighters must use self-contained breathing apparatus.

UNUSUAL FIRE AND EXPLOSION HAZARDS: None.

COMBUSTION PRODUCTS: Fumes, smoke, carbon monoxide, sulfur oxides, aldehydes and other decomposition products, in the case of incomplete combustion.

Flash Point C(F): > 105(221) (ASTM D-93).

Flammable Limits (approx.% vol.in air) - LEL: NE, UEL: NE

NFPA HAZARD ID: Health: 1, Flammability: 1, Reactivity: 0

---

6. ACCIDENTAL RELEASE MEASURES

NOTIFICATION PROCEDURES: Report spills as required to appropriate authorities. U. S. Coast Guard regulations require immediate reporting of spills that could reach any waterway including intermittent dry creeks. Report spill to Coast Guard toll free number (800) 424-8802. In case of accident or road spill notify CHEMTREC (800) 424-9300.

PROCEDURES IF MATERIAL IS RELEASED OR SPILLED: Eliminate all ignition sources. Ventilate area. Adsorb on fire retardant treated sawdust, diatomaceous earth, etc. Shovel up with spark-resistant

shovel and remove to appropriate waste disposal facility in accordance with current applicable laws and regulations.

ENVIRONMENTAL PRECAUTIONS: Prevent spills from entering storm sewers or drains and contact with soil.

PERSONAL PRECAUTIONS: See Section 8

---

7. HANDLING AND STORAGE

HANDLING: Avoid prolonged repeated skin contact. Avoid inhalation of vapors or mists. Wash thoroughly after handling. High pressure injection under the skin may occur due to the rupture of pressurized lines. Always seek medical attention.

STORAGE: Do not store in open or unlabelled containers. Store away from strong oxidizing agents and combustible materials. Store in a cool, dry, well ventilated area away from heat.

SPECIAL PRECAUTIONS: Prevent small spills and leakages to avoid slip hazard.

EMPTY CONTAINER WARNING: Empty containers retain residue (liquid and/or vapor) and can be dangerous. DO NOT PRESSURIZE, CUT, WELD, BRAZE, SOLDER, DRILL, GRIND OR EXPOSE SUCH CONTAINERS TO HEAT, FLAME, SPARKS, STATIC ELECTRICITY, OR OTHER SOURCES OF IGNITION; THEY MAY EXPLODE AND CAUSE INJURY OR DEATH. Do not attempt to refill or clean container since residue is difficult to remove. Empty drums should be completely drained, properly bunged and promptly returned to a drum reconditioner. All containers should be disposed of in an environmentally safe manner and in accordance with governmental regulations.

---

8. EXPOSURE CONTROLS/PERSONAL PROTECTION

OCCUPATIONAL EXPOSURE LIMITS: When mists/aerosols can occur, the following are recommended: 5 mg/m3(as oil mist)- ACGIH Threshold Limit Value (TLV), 10 mg/m3 (as oil mist)

- ACGIH Short Term Exposure Limit (STEL), 5 mg/m3 (as oil mist) - OSHA Permissible Exposure Limit (PEL)

VENTILATION: Use in well ventilated area. If mechanical ventilation is necessary, equipment should be explosion proof.

RESPIRATORY PROTECTION: Approved respiratory protective equipment must be used when vapor or mists concentrations exceed applicable standards. No special requirements under ordinary conditions of use and with adequate ventilation.

EYE PROTECTION: Normal industrial eye protection practices should be employed.

SKIN PROTECTION: If prolonged or repeated skin contact is likely, impervious gloves should be worn. Good personal hygiene practices should always be followed.

---

9. PHYSICAL AND CHEMICAL PROPERTIES

Typical physical properties are given below. Consult Product Data Sheet for specific details.

APPEARANCE: Liquid

COLOR: Red

ODOR: Mild
ODOR THRESHOLD-ppm: NE
pH: NA
BOILING POINT C(F): NE
MELTING POINT C(F): NA
FLASH POINT C(F): > 105(221) (ASTM D-93)
FLAMMABILITY (solids): NE
AUTO FLAMMABILITY C(F): NE
EXPLOSIVE PROPERTIES: NA
OXIDIZING PROPERTIES: NA
VAPOR PRESSURE-mmHg 20 C: NE
VAPOR DENSITY: NE
EVAPORATION RATE: NE
RELATIVE DENSITY, 15/4 C: 0.85
SOLUBILITY IN WATER: Negligible
PARTITION COEFFICIENT: NE
VISCOSITY AT 40 C, cSt: 13.8
VISCOSITY AT 100 C, cSt: 5.3
POUR POINT C(F): -70(-94)
FREEZING POINT C(F): NE
VOC: < 80.00 (Wt. %); 5.669 lbs/gal
NA=NOT APPLICABLE NE=NOT ESTABLISHED D=DECOMPOSES

FOR FURTHER TECHNICAL INFORMATION, CONTACT YOUR MARKETING REPRESENTATIVE

---

10. STABILITY AND REACTIVITY

STABILITY (THERMAL, LIGHT, ETC.): Stable.
CONDITIONS TO AVOID: Heat, sparks, flame and build up of static electricity. Protect from direct sunlight.
INCOMPATIBILITY (MATERIALS TO AVOID): Strong oxidizers.
HAZARDOUS DECOMPOSITION PRODUCTS: Product does not decompose at ambient temperatures.
HAZARDOUS POLYMERIZATION: Will not occur.

---

11. TOXICOLOGICAL DATA

---ACUTE TOXICOLOGY---

ORAL TOXICITY (RATS): Practically non-toxic (LD50: greater than 2000 mg/kg). ---Based on testing of similar products and/or the components.
DERMAL TOXICITY (RABBITS): Practically non-toxic (LD50: greater than 2000 mg/kg). ---Based on testing of similar products and/or the components.
INHALATION TOXICITY (RATS): Not established
EYE IRRITATION (RABBITS): Practically non-irritating. (Draize score: greater than 6 but 15 or less). ---Based on testing of similar products and/or the components.
SKIN IRRITATION (RABBITS): Practically non-irritating. (Primary Irritation Index: greater than 0.5 but less than 3). ---Based on testing of similar products and/or the components.

---SUBCHRONIC TOXICOLOGY (SUMMARY)---

Severely solvent refined and severely hydrotreated mineral base oils have been tested at Mobil Environmental and Health Sciences Laboratory by dermal application to rats 5 days/week for 90 days

at doses significantly higher than those expected during normal industrial exposure. Extensive evaluations including microscopic examination of internal organs and clinical chemistry of body fluids, showed no adverse effects.

---CHRONIC TOXICOLOGY (SUMMARY)---

The base oils in this product are severely solvent refined and/or severely hydrotreated. Chronic mouse skin painting studies of severely treated oils showed no evidence of carcinogenic effects. These results are confirmed on a continuing basis using various screening methods such as the Mobil Modified Ames Test and IP-346.

---

12. ECOLOGICAL INFORMATION

ENVIRONMENTAL FATE AND EFFECTS: This environmental assessment was conducted using information on the individual components as no test data was available for this specific formulation.

ECOTOXICITY: This material is not expected to be harmful to aquatic organisms.

MOBILITY: Dissolution of the higher molecular weight hydrocarbon components in water will be limited, but losses through sediment adsorption may be significant.

PERSISTENCE AND DEGRADABILITY: The majority of the components in this product are expected to be inherently biodegradable.

BIOACCUMULATIVE POTENTIAL: This product contains components with the potential to bio-accumulate.

---

13. DISPOSAL CONSIDERATIONS

WASTE DISPOSAL: Product is suitable for burning in an enclosed, controlled burner for fuel value or disposal by supervised incineration. Such burning may be limited pursuant to the Resource Conservation and Recovery Act. In addition, the product is suitable for processing by an approved recycling facility or can be disposed of at an appropriate government waste disposal facility. Use of these methods is subject to user compliance with applicable laws and regulations and consideration of product characteristics at time of disposal.

RCRA INFORMATION: The unused product, in our opinion, is not specifically listed by the EPA as a hazardous waste (40 CFR, Part 261D), nor is it formulated to contain materials which are listed hazardous wastes. It does not exhibit the hazardous characteristics of ignitability, corrosivity, or reactivity. The unused product is not formulated with substances covered by the Toxicity Characteristic Leaching Procedure (TCLP). However, used product may be regulated.

14. TRANSPORT INFORMATION

USA DOT: NOT REGULATED BY USA DOT.

RID/ADR: NOT REGULATED BY RID/ADR.

IMO: NOT REGULATED BY IMO.

IATA: NOT REGULATED BY IATA.

15. REGULATORY INFORMATION

US OSHA HAZARD COMMUNICATION STANDARD: Product assessed in accordance with OSHA 29 CFR 1910.1200 and determined to be hazardous.

EU Labeling: Product is not dangerous as defined by the European Union Dangerous Substances/Preparations Directives.

Symbol: Not applicable.

Risk Phrase(s): Not applicable.

Safety Phrase(s): S24-62.
Avoid contact with skin. If swallowed, do not induce vomiting: seek medical advice immediately and show this container or label.

Contains: Low Viscosity Oil.

Governmental Inventory Status: All components comply with TSCA, EINECS/ELINCS, AICS, METI, and DSL.

U.S. Superfund Amendments and Reauthorization Act (SARA) Title III:
This product contains no "EXTREMELY HAZARDOUS SUBSTANCES".

SARA (311/312) REPORTABLE HAZARD CATEGORIES:
CHRONIC ACUTE

This product contains no chemicals subject to the supplier notification requirements of SARA (313) toxic release program.

The following product ingredients are cited on the lists below:

CHEMICAL NAME	CAS NUMBER	LIST CITATIONS
TRIPHENYL PHOSPHATE (0.15%)	115-86-6	22

--- REGULATORY LISTS SEARCHED ---

1=ACGIH ALL	6=IARC 1	11=TSCA 4	16=CA P65 CARC	21=LA RTK
2=ACGIH A1	7=IARC 2A	12=TSCA 5a2	17=CA P65 REPRO	22=MI 293
3=ACGIH A2	8=IARC 2B	13=TSCA 5e	18=CA RTK	23=MN RTK
4=NTP CARC	9=OSHA CARC	14=TSCA 6	19=FL RTK	24=NJ RTK
5=NTP SUS	10=OSHA Z	15=TSCA 12b	20=IL RTK	25=PA RTK
				26=RI RTK

Code key: CARC=Carcinogen; SUS=Suspected Carcinogen; REPRO=Reproductive

16. OTHER INFORMATION

USE: AVIATION HYDRAULIC FLUID

NOTE: PRODUCTS OF EXXON MOBIL CORPORATION AND ITS AFFILIATED COMPANIES ARE NOT FORMULATED TO CONTAIN PCBS.

Health studies have shown that many hydrocarbons pose potential human health risks which may vary from person to person. Information provided on this MSDS reflects intended use. This product should not be used for other applications. In any case, the following advice should be considered:

INJECTION INJURY WARNING: If product is injected into or under the skin, or into any part of the body, regardless of the appearance of the wound or its size, the individual should be evaluated immediately by a physician as a surgical emergency. Even though initial symptoms from high pressure injection may be minimal or absent, early surgical treatment within the first few hours may significantly reduce the ultimate extent of injury.

Precautionary Label Text:

CONTAINS LOW VISCOSITY OIL

CAUTION!

LOW VISCOSITY MATERIAL-IF SWALLOWED, MAY BE ASPIRATED AND CAN CAUSE SERIOUS OR FATAL LUNG DAMAGE. MAY CAUSE NOSE, THROAT AND LUNG IRRITATION, DIZZINESS, NAUSEA, LOSS OF CONSCIOUSNESS.

PROLONGED, REPEATED SKIN CONTACT MAY CAUSE IRRITATION.

Keep away from heat, sparks, and flame. Avoid breathing vapor. Avoid contact with skin or clothing. Keep container closed. Use with adequate ventilation.

FIRST AID: If inhaled, remove to fresh air. If not breathing, give artificial respiration, preferably mouth-to-mouth. If breathing is difficult, give oxygen. Call a physician immediately. In case of contact, wash skin with soap and water. Remove contaminated clothing. Call a physician if irritation persists. Wash or dispose of contaminated clothing. If swallowed, seek immediate medical attention. Do not induce vomiting. Only induce vomiting at the instruction of a physician.

For industrial use only. Not intended or suitable for use in or around a household or dwelling.

Empty container may contain product residue, including flammable or explosive vapors. Do not cut, puncture, or weld on or near container. All label warnings and precautions must be observed until container has been thoroughly cleaned or destroyed.

Refer to product Material Safety Data Bulletin for further safety and health information.

****
For Internal Use Only: MHC: 1* 1* NE 1* 1*, MPPEC: C, TRN: 490110-00, ELIS: 400275, CMCS97: 970584, REQ: MIAMI, SAFE USE: C
EHS Approval Date: 12AUG2003
****

Information given herein is offered in good faith as accurate, but without guarantee. Conditions of use and suitability of the product for particular uses are beyond our control; all risks of use of the product are therefore assumed by the user and WE EXPRESSLY DISCLAIM ALL WARRANTIES OF EVERY KIND AND NATURE, INCLUDING WARRANTIES OF MERCHANTABILITY AND FITNESS FOR A PARTICULAR PURPOSE IN RESPECT TO THE USE OR SUITABILITY OF THE PRODUCT. Nothing is intended as a recommendation for uses which infringe valid patents or as extending license under valid patents. Appropriate warnings and safe handling procedures should be provided to handlers and users. Alteration of this document is strictly prohibited. Except to the extent required by law, republication or retransmission of this document, in whole or in part, is not permitted. Exxon Mobil Corporation and its affiliated companies assume no responsibility for accuracy of information unless the document is the most current available from an official ExxonMobil distribution system. Exxon Mobil Corporation and its affiliated companies neither represent nor warrant that the format, content or product formulas contained in this document comply with the laws of any other country except the United States of America.

Prepared by: ExxonMobil Oil Corporation
Environmental Health and Safety Department, Clinton, USA